EUROCUSTOMAUTOS.

INSTALLATION MANUAL

CARPLAY AND ANDROID AUTO MODULE VW GOLF MK7 WITH MIB I

Fitting the EuroCustomAutos wireless CarPlay and Android Auto module to a Golf, GTI or Golf R MK7 with the factory MIB I unit. Plugs in at the glovebox, nothing to cut.

Written by the EuroCustomAutos workshop in Mississauga, ON. Last updated November 2026.
Online version with photos: eurocustomautos.com/guide-carplay-golf7.html

Read this first. This guide covers the **EuroCustomAutos CarPlay and Android Auto module on a VW Golf, GTI or Golf R MK7 with the factory MIB I unit**. It does not fit MIB II cars, which are the ones that came with App-Connect or factory CarPlay. **The module's video lead connects at the MIB unit in the glovebox, never behind the screen. Where the LVDS plugs in** shows exactly how. Turn the ignition off before you unplug anything. Provided for information only, you work on your own vehicle at your own risk.

FITS	VW Golf, GTI and Golf R MK7 with the MIB I unit, usually 2015 and 2016 cars with the 5.8" or 6.5" screen
TIME	15 to 30 minutes once you have done one. Allow an hour for your first
DIFFICULTY	Easy. Hand tools only, nothing to cut or splice
CODING	None
KEY TOOLS	Two VW radio release keys, a T20 Torx driver, a plastic trim tool, and zip ties or foam tape
PARTS TO BUY FIRST	Just our **Golf 7 CarPlay module**. Every connection plugs in, so there is nothing else to source.

WHAT YOU ARE ACTUALLY DOING

Your MK7 has two parts to its infotainment. The screen in the dash is only a display. The brains are in the MIB unit, a box that sits in the top of the glovebox. The MIB unit sends the picture up to the screen through one video cable, called the LVDS.

The module sits in that video line, right at the MIB unit. Hold MENU and it swaps its own CarPlay or Android Auto picture onto the screen. It also plugs in line with the MIB unit's main power plug, the quadlock, for power, steering wheel buttons and the car's own microphone.

The one part that trips people up is where the LVDS video cable plugs in. Read **Where the LVDS plugs in** before you start Step 3.

SOUND GOES THROUGH AUX

The module's sound always goes into the car's AUX input, through the AUX OUT lead on the power cable. Cars without an AUX input need an AMI cable. Before you start, plug your phone into the car's AUX or AMI input and make sure music plays. If nothing plays, that input has to be turned on first. An AMI input may stay off until a cable is plugged into it.

TOOLS AND WHAT IS IN THE BOX

TOOLS

- Two VW radio release keys, for pulling the MIB unit
- T20 Torx driver, only if the glovebox has to come out
- Plastic trim tool, for the dash side panel
- Zip ties or foam tape for mounting the module and holding the leads

WHAT IS IN THE BOX

- **CarPlay module.** The DIP switches and the LVDS socket are on one end.
- **Power cable.** The quadlock T-harness, with the mic, AUX OUT and camera leads coming off it.
- **USB and RCA camera cable.**
- **LVDS video cable.** Three ends: one to the module, one into the MIB unit, one for the car's original display cable.
- **Wi-Fi antenna.**

Count everything before you start. A missing lead is far easier to sort out before the glovebox is apart.

STEP 1: SET THE DIP SWITCHES

Set the switches to match your screen before you install the module. They sit on the end of the module, between the USB/VIDEO plug and the LVDS socket, and they are much easier to reach on the bench than once the module is tucked away.



The DIP switches, between the USB/VIDEO plug and the LVDS socket.

YOUR SCREEN	SWITCH 1	SWITCHES 2 TO 8
5.8" or 6.5" (MIB I)	ON	OFF

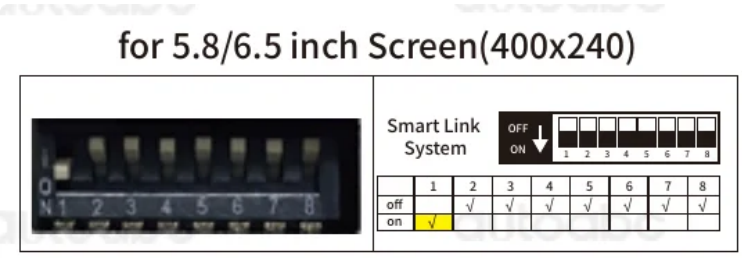

The manufacturer's chart for 5.8" and 6.5" screens: switch 1 ON, the rest OFF.

- **Touch does not work on the CarPlay screen?** Also set switch 8 ON and leave the rest unchanged. This is the Golf touch fix.
- **Power cycle after every change.** The module only reads the switches when it powers up. Unplug its power lead for a few seconds and plug it back in.
- If the label on your module shows a different chart, follow the label.

STEP 2: GET TO THE MIB UNIT

1. **Ignition off, key out.** Do every plug and unplug with the car fully off, so the MIB unit has no power.
2. **Drop the glovebox.** On the MK7 the inner part of the glovebox hangs on hooks. Push the hooks at the top left and top right out of the foam and the inner part drops down, which gives you room to work. If yours will not drop, remove the glovebox: undo the T20 screws at the top and bottom, plus one hidden screw behind the cover under the climate controls. Unplug the passenger airbag switch before you pull it out.
3. **Pull the MIB unit.** Push the two release keys into the slots on its face with the straight side facing out. Don't push them in too far, or the unit will not come out. Pull the unit toward you.
4. **Unplug two connectors.** Take a photo of the back first. Black quadlock block: press its tab, press the lever down slightly, and it comes out on its own. Pink or grey LVDS video plug: press it down into its holder at the bottom. If it is tight, carefully pry the seam with a small flat tool. Leave every other plug connected, and cut any tape between the cables if you need more slack.

STEP 3: PLUG IN THE MODULE

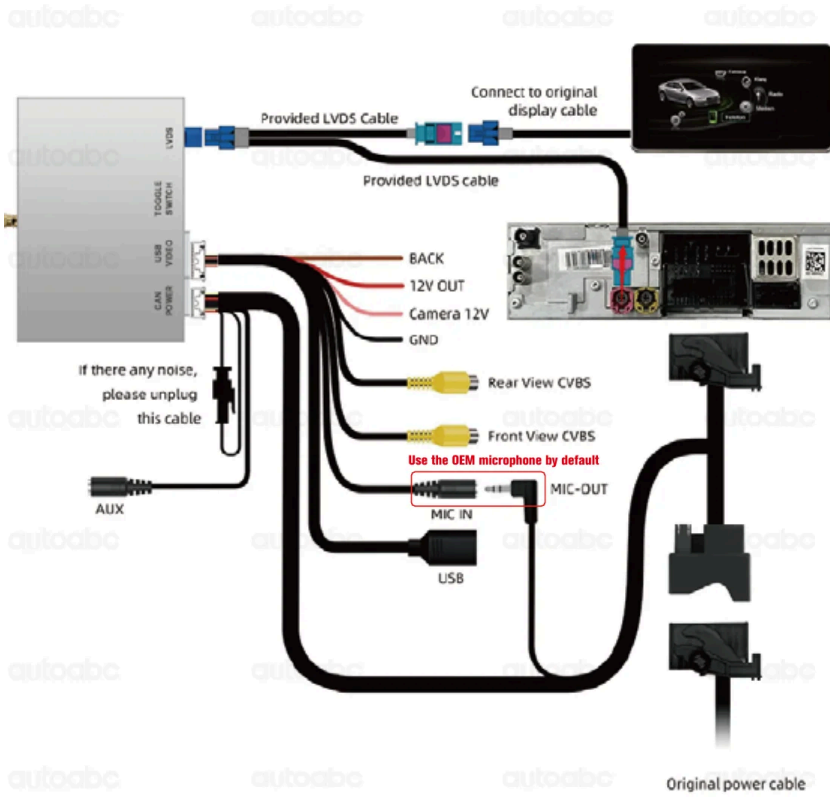

The manufacturer's wiring diagram. The provided LVDS cable plugs into the MIB unit and onto the car's original display cable. Everything else comes off the power cable.

1. **Connect the quadlock T-harness.** Plug the car's black quadlock block into the matching plug on the T-harness. The other end of the harness goes into the MIB unit.
2. **Connect the LVDS video at the MIB unit.** Push the module's LVDS plug into the MIB unit's LVDS socket, where the original plug came out. Then plug the car's original LVDS cable, the one that runs up to the screen, into the socket end of the module's cable. The blue end goes to the module. **Where the LVDS plugs in** shows every end with a diagram.
3. **Connect the microphone.** CarPlay uses the car's own microphone, so no extra mic is needed. Plug the MIC OUT lead on the T-harness into the MIC IN jack on the module's harness.
4. **Connect AUX.** Run the AUX OUT lead on the power cable to the car's AUX input. Cars without AUX use an AMI cable. This is where all of the module's sound comes from.
5. **Place the antenna.** Stick it to a plastic surface. Keep it off metal and off the module itself.
6. **Run the USB lead** to where you want to plug in your phone for wired use. Along or behind the cabin air filter cover at the back of the glovebox works well.
7. **Connect the module.** Plug the power cable, the blue LVDS end, USB and antenna into the module.

STEP 4: TEST, THEN TUCK IT AWAY

> **Check that everything works before you put anything back together.** Leave the MIB unit hanging out and the module loose while you test. A loose plug is a two minute fix now, and a glovebox and dash job once it is all closed up.

1. **Power up.** If you unplugged the airbag switch, plug it back in first. Then turn the ignition on and set the car's audio source to AUX (Media, then Source). The module only works with the ignition on.
2. **Check all five.** The screen switches to the module when you hold MENU for 3 seconds. Touch works on the CarPlay screen. You get sound. The reverse camera shows in reverse. A phone call works both ways. If anything fails, check the DIP switches, **Where the LVDS plugs in** and the tips below, then test again.
3. **Refit the MIB unit.** Only once everything works. Turn the ignition off, check every plug is fully seated, then push the unit back in until it clicks. Don't force it. If it stops short, pull the cables back from outside to make room. The square harness plug block sits outside the compartment.
4. **Tuck the module away.** See the tip below.
5. **Put it all back.** Clip or screw the glovebox into place and refit the dash side panel. Tuck the cables into the free space so none are pinched or sitting over a screw hole.

> **Where to tuck the box.** The MIB unit's compartment has an opening on top for the cables. Feed the module's leads up through it and then down to the right, toward the passenger end of the dash. Pop the dash side panel off at that end with a trim tool, and tuck the module into the space behind it, beside the glovebox. Strap it down with zip ties or foam tape so it can't rattle, keep its vents clear, and leave a little slack in the LVDS leads so they can't pull out. Keep the antenna on plastic, away from metal. AutoABC's **Golf MK7 install video** shows the whole job, including the cable route.

STEP 5: SWITCH SCREENS AND PAIR YOUR PHONE

Hold MENU for 3 seconds to switch between the factory screen and the module. Everything else on the car works as before.



Hold MENU (1) for 3 seconds to switch screens.

WIRELESS CARPLAY (IPHONE)

1. On the module's screen, turn on CarPlay.

2. On your iPhone, turn Wi-Fi on and leave it on.
3. In Bluetooth, tap the device named CAR-xxxx, then Pair.
4. Tap Use CarPlay when your phone asks.

WIRELESS ANDROID AUTO

1. On the module's screen, turn on Android Auto.
2. In Bluetooth on your phone, tap the device named CAR-xxxx, then Pair.
3. Follow the Android Auto prompts on screen. After the first time it connects on its own.

WIRED AND AIRPLAY

- **Wired.** Plug your phone into the module's USB lead with a good quality cable. A genuine Apple cable gives the most stable connection on iPhone.
- **AirPlay screen mirroring.** Turn on AirPlay on the module's screen, join the Wi-Fi network CAR-WIFI-xxxx (password 66668888), then pick the module under Screen Mirroring.

SOUND

Sound always goes through AUX. In the module's settings, make sure "Use car's BT channel" is OFF, then set the car's source to AUX (Media, then Source).

SETTINGS WORTH CHECKING

- **Reverse camera.** In the module's settings, select the original camera so your factory camera shows in reverse.
- **Climate display.** If the fan speed or other climate info on screen doesn't match your car, change Aircondition Type to Type B.
- **Call echo.** If callers hear an echo, go to Settings, Audio, AEC Delay. With the car quiet and the volume at a medium level, tap Start Auto AEC and wait about 20 seconds.
- **Firmware.** Don't update the firmware unless we ask you to.

WHERE THE LVDS PLUGS IN

The one rule: connect at the MIB unit in the glovebox, not behind the screen. The picture starts at the MIB unit and runs up to the screen through the original LVDS cable. The module has to sit at the start of that line to swap in its own picture. Connected behind the screen, it is past the point where the picture starts. CarPlay can still run and even play audio, but the screen never switches. The screen is the obvious place to look, which is why this is the easiest mistake to make.

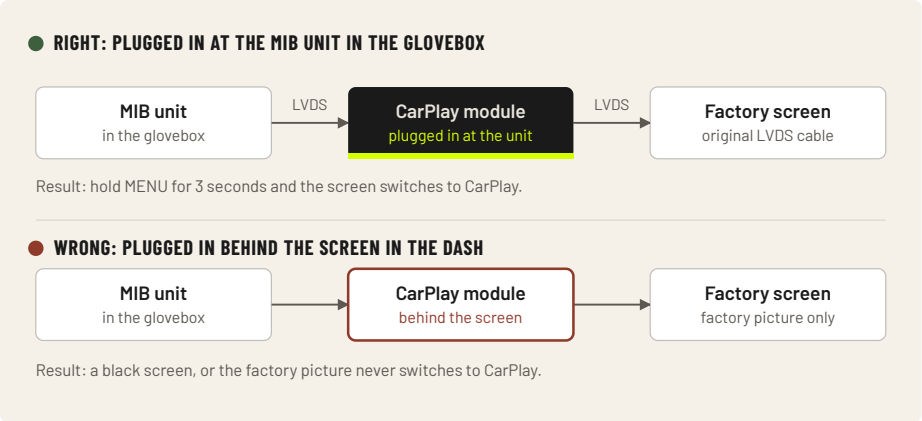

The module goes in at the start of the video line, at the MIB unit. Behind the screen it can never put its picture on the display.

The LVDS cable in the box has three ends. Here is where each one goes:

- **The blue end** goes into the LVDS socket on the module, next to the DIP switches.
- **The plug** goes into the LVDS socket on the back of the MIB unit, where the car's original LVDS plug came out. On most cars this socket is pink. On a few it is grey.
- **The socket end** takes the car's original LVDS plug, the one you unplugged from the MIB unit. That is the cable that runs up to the screen.

When it is right, the car's original LVDS cable no longer touches the MIB unit. It plugs into the module's cable instead, and the module's cable plugs into the MIB unit.

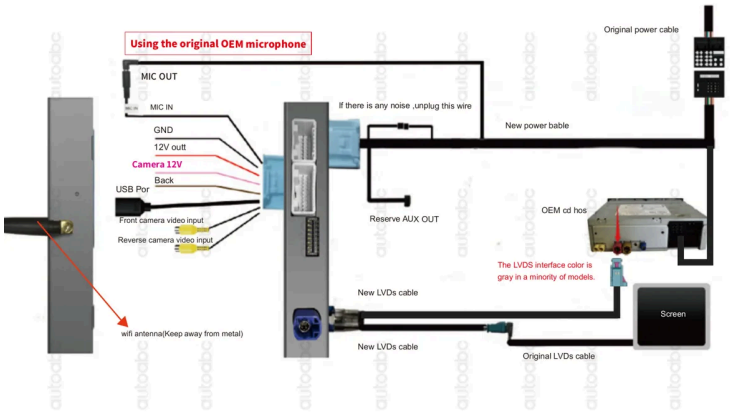

The manufacturer's cable connection chart. One new LVDS lead goes into the MIB unit (OEM cd host). The other joins the original LVDS cable that runs to the screen.

TIPS & COMMON PROBLEMS

Almost everything that goes wrong here comes down to where the LVDS is connected or how the DIP switches are set. Check those two first.

- **Audio plays, but holding MENU does nothing and the factory picture stays normal.** The module isn't in the video line. The LVDS was almost certainly connected behind the screen. Move it to the back of the MIB unit in the glovebox (see **Where the LVDS plugs in**).
- **Black screen.** The LVDS is behind the screen, or its ends are mixed up. The module's plug goes into the MIB unit, the car's original cable goes into the module's socket end, and the blue end goes into the module.
- **The picture flickers, blacks out for a moment or looks scrambled when you hold MENU.** The DIP switches don't match your screen. Set switch 1 ON and the rest OFF, then power cycle the module.
- **CarPlay shows but touch doesn't respond.** Set switch 8 ON, leave the rest unchanged, then power cycle the module.
- **Nothing happens at all.** The ignition is off. The module only works with the ignition on.
- **No sound from CarPlay.** Set the car's source to AUX and check "Use car's BT channel" is OFF in the module's settings. Make sure the AUX OUT lead is plugged into the car's AUX input. If that input never plays anything, it needs turning on.
- **A hum or noise through the speakers.** Unplug the small lead on the power cable that the wiring diagram marks "if there is any noise, unplug this cable".
- **Wireless keeps dropping back to the menu.** That's Wi-Fi interference. In the module's Wi-Fi settings, change the channel to 48 or 161, and keep the antenna on plastic.
- **The MIB unit won't come out.** The release keys are in too far. Pull them back slightly, straight side facing out, and try again.
- **An airbag light after the install.** The airbag switch was unplugged with the ignition on. Clear the fault with a scan tool.
- **A DIP change made no difference.** The module wasn't power cycled. Unplug its power lead for a few seconds and reconnect.

> **Stuck, or have a question?** Message us on **Instagram @eurocustomautos** or through our **contact page** with a photo of the back of your MIB unit and the module's switches, and we will help you finish the job. Your **CarPlay module** is covered by our 1-year warranty.

EUROCUSTOMAUTOS

Copyright © 2026 EuroCustomAutos. All rights reserved. eurocustomautos.com
EuroCustomAutos is an independent workshop, not affiliated with or endorsed by Volkswagen AG or Apple Inc. Vehicle names and marks are used for compatibility identification only and remain the property of their respective owners. Module diagrams and DIP chart courtesy of the module manufacturer.